LP12 产品规格书 Datasheet

凌科电气

优点【Advantages】

1、全塑胶 / 全金属 / 半金属三种结构可选，可满足不同场景对抗干扰、高强度、高耐蚀等差异化诉求；
2、小巧玲珑、精致耐用，可适应设备对连接器小型化、轻型化的要求
3、采用一键按扣式锁紧方式，即插即用，快捷方便；
4、多重防水设计，具备高防水性能，可避免外部水液侵入。

1. Full plastic,full metal and semi-metal structures are optional, which can meet the differentiated demands of anti-interference, high strength, and high corrosion resistance in different scenarios;
2. Small and exquisite, exquisite and durable, which can meet the requirements of equipment for miniaturization and light-weight connectors;
3. one-click button locking method is adopted, plug and play, fast and convenient;
4. Multiple waterproof design, with high waterproof performance, can avoid the intrusion of external water and liquid.



尺寸图【Dimension Drawing】

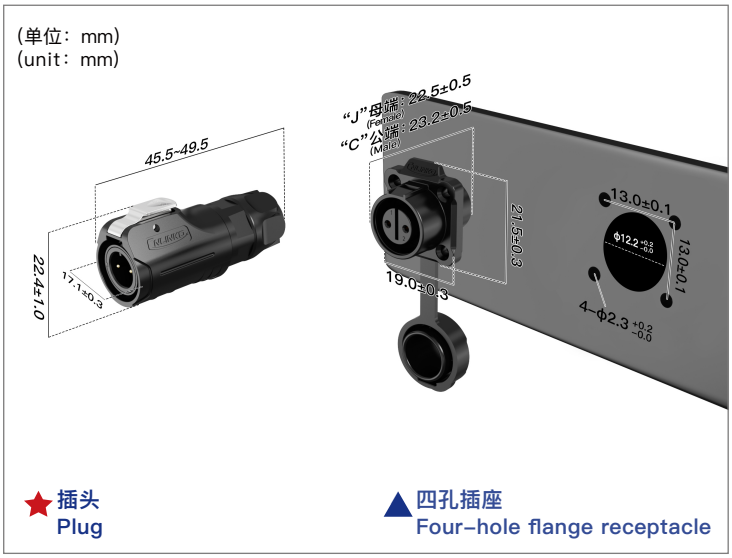

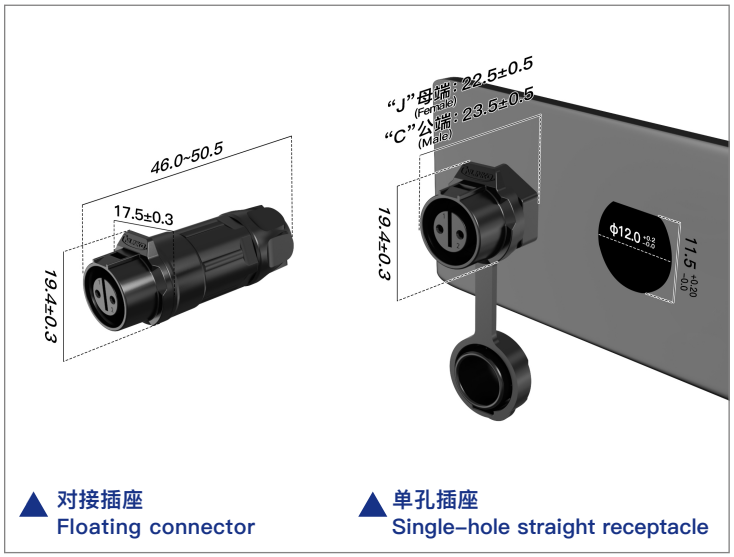

规格【Specifications】

电气性能 Electrical	
额定电流 Current rated	5A
额定电压 Rated voltage	125V AC
耐　压 Withstand voltage	1500V AC
接触电阻 Max Contact resistance Max	5.0mΩ
绝缘电阻 Min Insulation resistance Min	500MΩ

机械性能 Mechanical	
耐 久 度 Min Life cycle Min	2000 次 2000 times
线材规格 Max Wire specification Max	0.34~0.5mm²/22~20AWG
适用线经 Cable O.D range	Φ4.5-Φ5.5mm
接线方式 Assembly style	焊接 Soldering

环境性能 Environmental	
防护等级 Protection level	IP68/IPX9K
温 升 Max Temperature rise Max	30K
工作温度 Temperature rating	-25℃~+85℃

材料 Material	
外壳 shell	PBT
密封件 Sealing	硅橡胶 Silicone rubber
绝缘体 Insulator	PBT
接触件规格 Contact Spec	Φ1.0*2
接触件材料 Contact Material	铜合金 Copper alloy
接触件表面处理 Contact Surface treatment	镍底 / 镀金 Ni/Au

多种模块组合【Multiple Module Combinations 】

公　端 Male	2PIN	3PIN	3PIN(锁线)	4PIN	5PIN	6PIN	7PIN	8PIN	-	-	-	-	-
额定电流 Current rated	5A	5A	5A	5A	5A	5A	3A	3A	-	-	-	-	-

具体料号可扫码咨询客服了解 .
Specific part number can scan code consult customer service to understand.

认证&体系 Certificate

IATF 16949

凌科官网　CNLINKO WEB